SUSPENSION, FRONT CARRIER AND HUB - Z26SPD92AN/AH/BN/BH (C750138)

2026 RZR - RZR PRO S ULTIMATE (R01) - Z26SPD92AN/AH/BN/BH

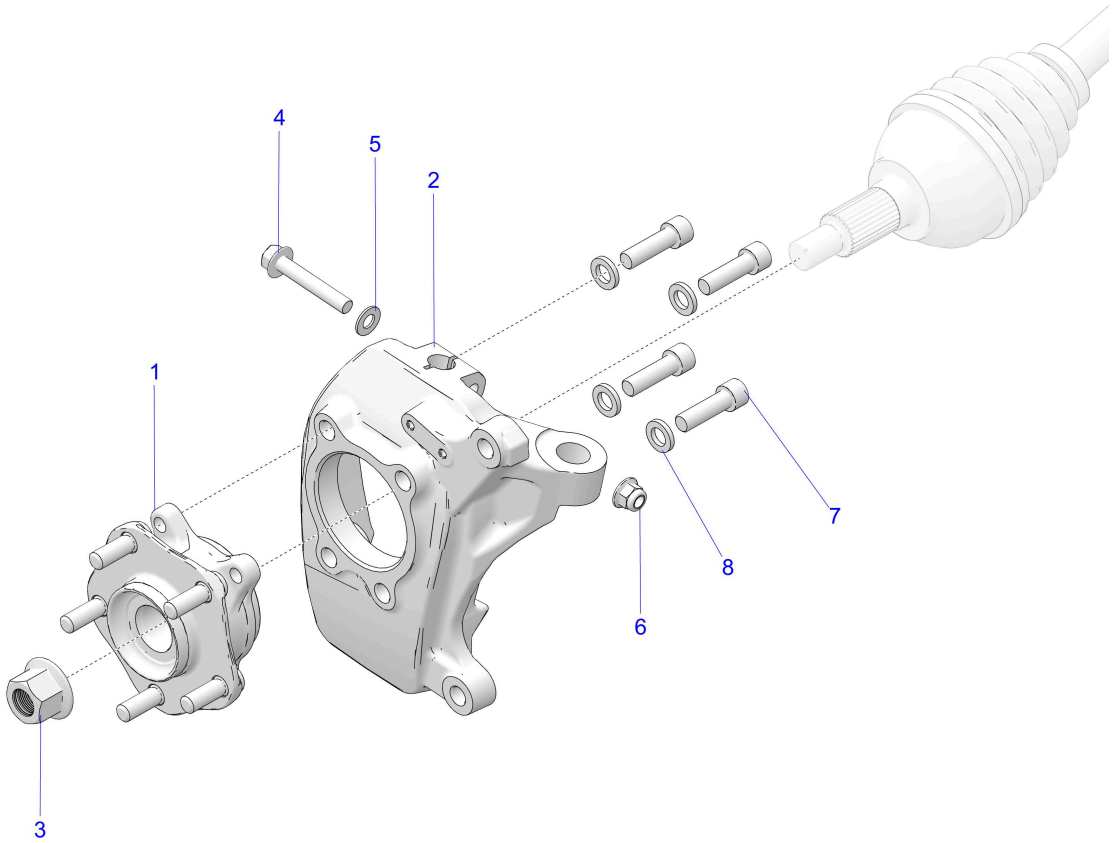

© 2023 Polaris Industries Inc. C750138

Reference #	*Part#*	*Description*	*Quantity*
1	1525346	ASM-UNITIZED HUB 5X4.5	2
2	5144067	KNUCKLE-FRONT M18,LH(MACH)	1
2	5144068	KNUCKLE-FRONT M18,RH(MACH)	1
3	7548051	NUT-M20X1.5,FLG-LCK,ZINC,8.8	1
4	7521333-60	SCR-HXFL-M10X1.5X60 10.9 ZFB	1
5	7556153	WASHER-3/8 FW SAE STL THRU-HRD	1
6	7548029	NUT-HXFL-M10X1.5 8 ZTB NYL	1
7	7521356	SCR-SH-M12X1.25X40 12.9 PTCH	4
8	7557160	WSHR-22X13X3 ZFB HRD	4

Copyright 1996-2026 Polaris Industries U.S.A All rights reserved.